INSTALLATION MANUAL AND OPERATING INSTRUCTIONS

MD41-( ) Series GPS Annunciation Control Unit For Garmin GNS 480 and Garmin AT CNX80 VHF Communication and Navigation Management System

MD41-1748	28vdc	Horizontal Mount
MD41-1748(5V)	28vdc	Horizontal Mount with 5 volt lighting
MD41-1758	28vdc	Vertical Mount (shown on page 11)
MD41-1758(5V)	28vdc	Vertical Mount with 5 volt lighting
MD41-1744	14vdc	Horizontal Mount
MD41-1754	14vdc	Vertical Mount (shown on page 11)

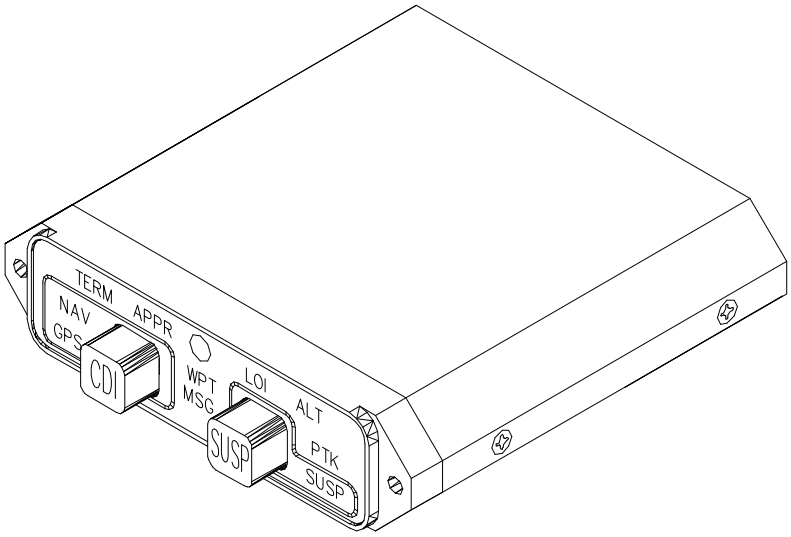

Mid-Continent Instruments and Avionics
9400 E. 34th Street N., Wichita, KS 67226 USA
Phone 316-630-0101 • Fax 316-630-0723

Manual Number 9015669
REV. 1 August 17, 2004

Revision Detail

Rev.	Date	Detail
N/R	06/05/03	Complete issue
1	08/17/04	Added Garmin GNS 480

TABLE OF CONTENTS

SECTION 1	**GENERAL DESCRIPTION**
1.1	INTRODUCTION
1.2	SPECIFICATIONS, TECHNICAL
1.2.1	PHYSICAL CHARACTERISTICS
1.2.2	ENVIRONMENTAL CHARACTERISTICS
1.2.3	SPECIFICATIONS, ELECTRICAL
1.2.4	FRONT PANEL CONTROLS AND ANNUNCIATIONS
1.2.4.1	CONTROLS
1.2.4.2	ANNUNCIATIONS
1.2.5	INTERFACE
1.2.6	EQUIPMENT LIMITATIONS
1.2.7	MAJOR COMPONENTS
SECTION 2	**INSTALLATION CONSIDERATIONS**
2.1	COOLING
2.2	EQUIPMENT LOCATION
2.3	ROUTING OF CABLES
SECTION 3	**INSTALLATION PROCEDURE**
3.1	GENERAL INFORMATION
3.2	UNPACKING AND INSPECTING
3.3	MOUNTING THE MD41-( )
3.4	INSTALLATION LIMITATIONS
SECTION 4	**POST INSTALLATION CHECKOUT**
4.1	PRE-INSTALLATION TEST
4.2	OPERATING INSTRUCTIONS
4.3	CONTINUED AIRWORTHINESS
FIGURE N0.	**LIST OF ILLUSTRATIONS**
3.1	SCHEMATIC PINOUT, 25 PIN DSUB
3.2	OUTLINE DRAWING
3.3	WIRING DIAGRAM, MD41-1744/1754 (14Volt), MD41-1748/1758/1748(5V)/1758(5V) (28volt)

APPENDIX

ENVIRONMENTAL QUALIFICATION FORM

SECTION 1 GENERAL DESCRIPTION

1.1 INTRODUCTION

The MD41-( ) is a compact, self -contained GPS Annunciation and Control unit. It meets all requirements for external (remote) mode selection and status annunciation for the Garmin GNS 480 VHF and Garmin AT CNX80 Communication, Navigation Management System.

Features include dual 20,000 hour lamps used for all annunciations, internally lighted selection switches and automatic photocell dimming. An external annunciation dimming adjustment is provided for balancing low level light conditions.

1.2 SPECIFICATIONS, TECHNICAL

1.2.1 PHYSICAL CHARACTERISTICS

Mounting:	Panel
Width:	3.25 Inches
Height:	.80 Inches
Depth:	3.20 Inches
Weight:	0.50 lbs.

1.2.2 ENVIRONMENTAL CHARACTERISTICS

TSO Compliance:	TSO C129
Applicable Documents:	RTCA DO-160D, DO-208
Operating Temperature Range:	-55°C to +70°C
Humidity:	95% Non-Condensing
Altitude Range:	0 to 55,000 ft.
Vibration:	Cat. U and S
Operational Shock:	Rigid Mounting, 6 G Operational 15 G Crash Safety

1.2.3 SPECIFICATIONS, ELECTRICAL

Design	All Solid State
MD41-1744/1754 (14VDC)	0.40 Amps
MD41-1748/1758 (28VDC)	0.30 Amps
MD41-1748(5V)/1758(5V) (28DC)	0.30 Amps

1.2.4 FRONT PANEL CONTROLS AND ANNUNCIATIONS

1.2.4.1 CONTROLS

CDI	Momentary action switch, when pressed, will select VOR/ILS (NAV) or GPS presentation on HSI/CDI.
SUSP	Momentary action switch, when pressed, will suspend automatic waypoint sequencing in the active flight plan.

1.2.4.2 ANNUNCIATIONS

NAV	VOR or ILS information presented on the HSI or CDI.
GPS	GPS information presented on the HSI or CDI.
MSG	Flashing indicates new status message(s) available
WPT	Flashing indicates aircraft is 10 to 20 seconds of reaching the turning point for course change. Steady indicates aircraft in course change turn.
SUSP	Automatic sequencing of waypoints has been suspended.
LOI	Loss of Integrity. WAAS/GPS detects a position error or unable to calculate integrity of position.
PTK	Parallel track mode is selected.
ALT	Altitude Alert. Indicates the estimated altitude is lower than the alarm limits.
TERM	On indicates aircraft is navigating within 30 miles of the departure or arrival airport or on a SID or STAR.
APR	On indicates the approach is active.

1.2.5 INTERFACE

CDI (select) J1 Pin 4	Provides a momentary low to the GNS 480 (CNX80)
SUSP (select) J1 Pin 12	Provides a momentary logic low to the GNS 480 (CNX80) when Suspend is selected.
NAV annunciation J1 Pin 2	Receives ground from GNS 480 (CNX80) when in VOR/ILS mode.
NAV annunciation output, J1 Pin 16.	Logic low when NAV annunciation is turned on. May be connected to MD200 NAV annunciation input.
GPS annunciation J1 Pin 1	Receives ground from GNS 480 (CNX80) when in GPS mode.

1.2.5 INTERFACE (cont.)

GPS annunciation output, J1 pin 14	Logic low when GPS annunciation is turned on. May be connected to MD200 GPS annunciation input.
SUSP annunciation J1 Pin 24	Requires a logic low to annunciate
TERM annunciation J1 Pin 15	Requires a logic low to annunciate
APPR annunciation J1 Pin 3	Requires a logic low to annunciate
WPT annunciation J1 Pin 8	Requires a logic low to annunciate
MSG annunciation J1 Pin 6	Requires a logic low to annunciate
PTK annunciation J1 Pin 11	Requires a logic low to annunciate
ALT annunciation J1 Pin 10	Requires a logic low to annunciate
LOI annunciation J1 Pin 9	Requires a logic low to annunciate
Lamp Test J1 Pin 7	Receives ground from remote test switch to light all annunciations. (optional connection)

1.2.6 EQUIPMENT LIMITATIONS

The MD41-( ) series control units contain specific dash numbers to be used with various GPS receivers or Navigation Management Systems. The installer must match the correct controller part number with the system being installed.

The conditions and tests required for TSO approval of this article are minimum performance standards. It is the responsibility of those desiring to install this article either on or within a specific type or class of aircraft to determine that the aircraft installation conditions are within the TSO standards. The article may be installed only if further evaluation by the applicant documents an acceptable installation and is approved by the Administrator.

The MD41-1744/1754/1748/1758/1748(5V)/1758(5V) is TSO'D and certified for use with the Garmin GNS 480 and Garmin AT CNX80 system. Any attempts to install the listed units in an installation other than these two systems is prohibited. **This will void the TSO.**

> **NOTE:** If the MD41-( ) is disconnected or removed from the aircraft, there will be no effect in the operation of the GNS 480 or CNX80.

1.2.7 MAJOR COMPONENTS

This system is comprised of one major component, the MD41-174X/175X series GPS Annunciation Control Unit.

SECTION 2 INSTALLATION CONSIDERATIONS

2.1 COOLING

No direct cooling is required. As with any electronic equipment, overall reliability may be increased if the MD41-( ) is not located near any high heat source or crowded next to other equipment. Means of providing a gentle air flow will be a plus.

2.2 EQUIPMENT LOCATION

The MD41-( ) must be mounted as close to the pilot's field of view as possible. The preferable location is near the HSI/CDI that will be displaying the GPS/NAV information. The unit depth, with connector attached, must also be taken into consideration. Note: Unlike previous versions of the MD41 Annunciation Control Units (ACU), the transfer relays are not required as all switching between GPS, VOR and ILS is handled by the GNS 480 or CNX80.This has allowed a for a smaller size ACU which now provides more options for panel mounting.

2.3 ROUTING OF CABLES

Care must be taken not to bundle the MD41-( ) logic and low level signal lines with any high energy sources. Examples of these sources include 400 HZ AC, Comm, DME, HF and transponder transmitter coax. Always use shielded wire when shown on the installation print. Avoid sharp bends in cabling and routing near aircraft control cables.

SECTION 3 INSTALLATION PROCEDURES

3.1 GENERAL INFORMATION

This section contains interconnect diagrams, mounting dimensions and other information pertaining to the installation of the MD41-( ). After installation of cabling and before installation of the equipment, ensure that power is applied only to the pins specified in the interconnect diagram.

3.2 UNPACKING AND INSPECTING EQUIPMENT

When unpacking equipment, make a visual inspection for evidence of damage incurred during shipment. The following parts should be included:

1. MD41-1744 (14volt) or MD41-1748 (28 volt) Horiz. Mount
   MD41-1754 (14volt) or MD41-1758 (28volt) Vert. Mount
   MD41-1748(5V) (28volt) 5 volt button lighting Horiz. Mount
   MD41-1758(5V) (28volt) 5 volt button lighting Vert. Mount
2. J1 Connector Kit (25 pin). MCI PN 7014517
3. Installation Manual. MCI PN 9015669

3.3 MOUNTING THE MD41-( )

Plan a location in the aircraft for the MD41-( ) to be mounted as close to the pilot's field of view as possible. The preferable location is near the HSI/CDI that will be displaying the navigation information. Avoid mounting close to heater vents or other high heat sources. Allow a clearance of at least 3 inches from back of unit for plug removal.

The indicator is secured in place behind the panel since it is designed for rear mount only. Make a panel cutout as shown in Figure 3-2. Secure the indicator in place with two 4-40 x 3/8 flat head phillips screws.

3.4 INSTALLATION LIMITATIONS

Wire the aircraft harness according to figure 3-3. Use at least 24 AWG wire for all connections. Avoid sharp bends and routing cable near high energy sources. Care must be taken to tie the harness away from aircraft controls and cables. Normal installation techniques should be applied. Also see equipment limitations, section 1.2.6.

J1 CONNECTOR

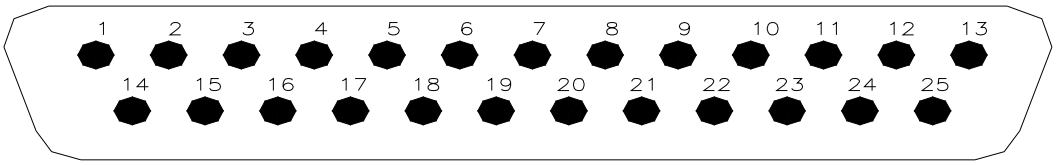

REAR VIEW OF J1 CONNECTOR

J1
PIN NO.

1 ---------- GPS ANNUNCIATION
2 ---------- NAV ANNNCIATION
3 ---------- APPR ANNUNCIATION
4 ---------- CDI SOURCE SELECT (momentary logic low sent to receiver)
5 ---------- DIMMER IN (from aircraft dimming bus for push-button lighting)
6 ---------- MSG ANNUNCIATION
7 ---------- LAMP TEST (receives ground from remote test switch)(optional conn.)
8 ---------- WPT ANNUNCIATION
9 ---------- LOI ANNUNCIATION
10 ---------- ALT ANNUNCIATION
11 ---------- PTK ANNUNCIATION
12 ---------- SUSP MODE SELECT (momentary logic low sent to the receiver)
13 ---------- 14 or 28 VDC UNIT POWER (depends on dash number)
14 ---------- GPS ANNUNCIATION OUTPUT
15 ---------- TERM ANNUNCIATION
16 ---------- NAV ANNUNCIATION OUTPUT
17 ---------- SPARE
18 ---------- SPARE
19 ---------- SPARE
20 ---------- SPARE
21 ---------- SPARE
22 ---------- SPARE
23 ---------- SPARE
24 ---------- SUSP ANNUNCIATION
25 ---------- POWER GROUND

FIGURE 3-1 SCHEMATIC PINOUT, 25 PIN DSUB

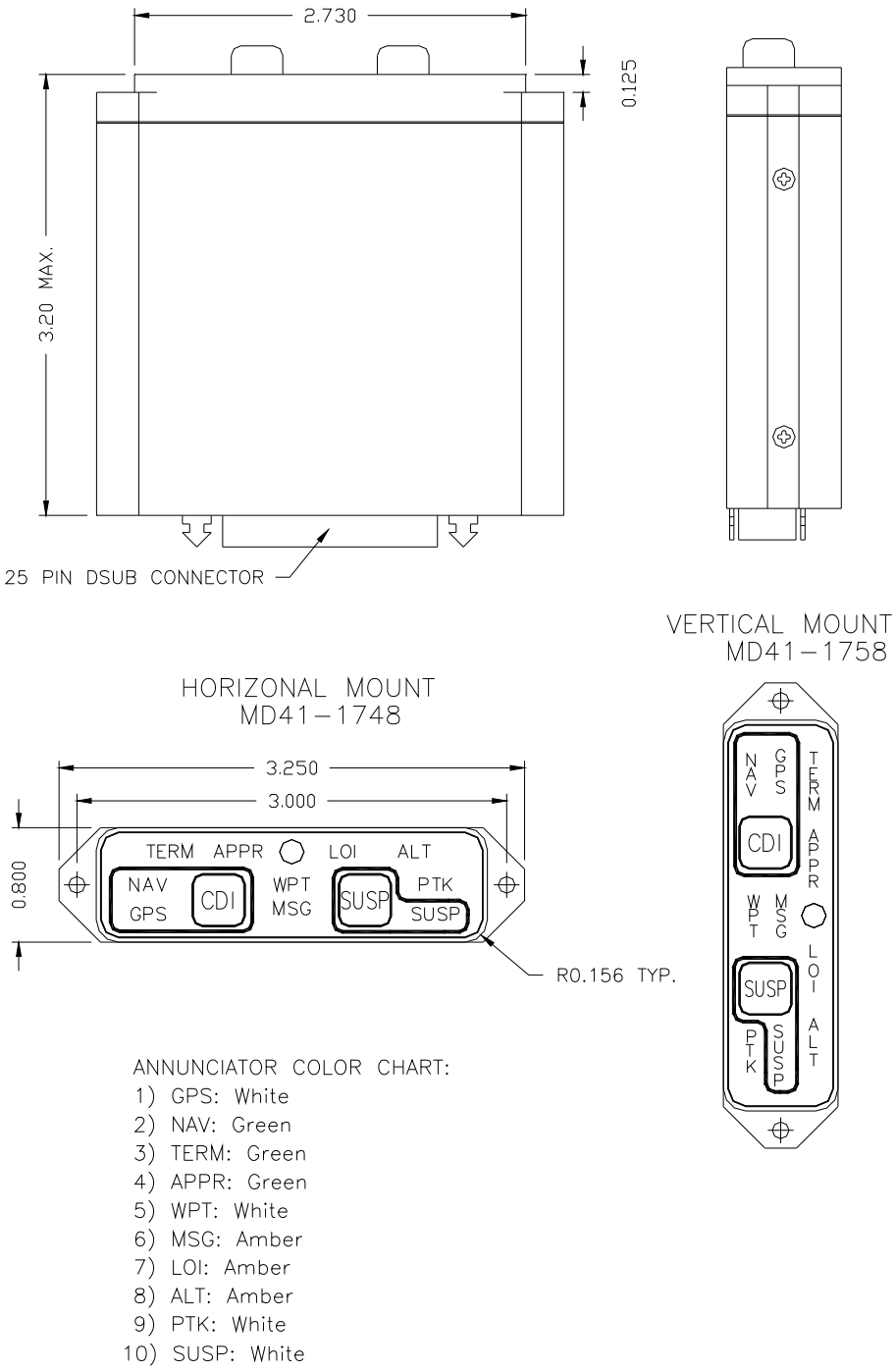

Note 1: Use two 4-40 X 3/8" Flat Head Phillips Screws for Mounting

FIGURE 3-2 OUTLINE DRAWING

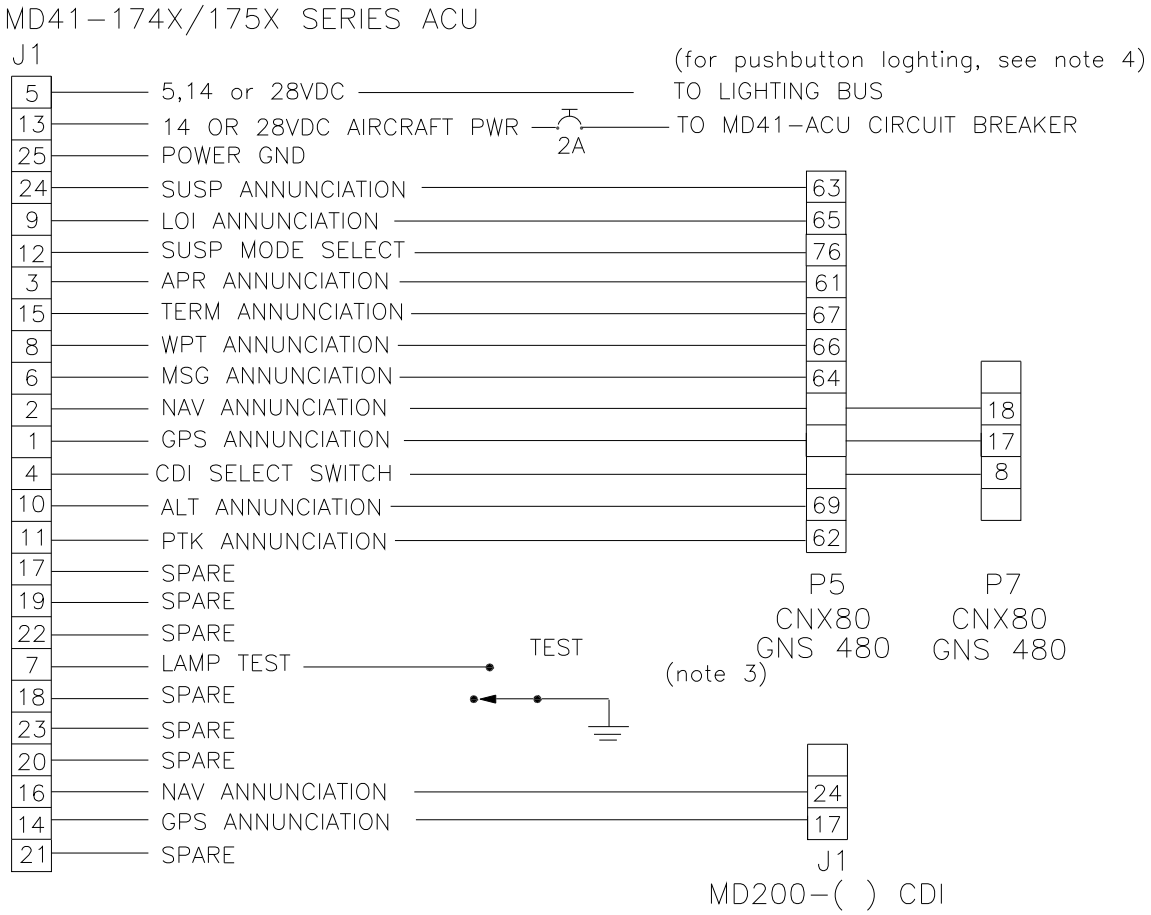

NOTES:

1) REFER TO GARMIN AT CNX80 OR GARMIN GNS 480 INSTALLATION MANUAL FOR ACTUAL INSTALLATION.

2) ALL WIRING SHALL BE 24 AWG UNLESS OTHERWISE NOTED.

3) MOMENTARY SWITCH FOR TEST. (optional connection)

4) 5 VOLT FOR MD41-1748(5V)/1758(5V), 14 VOLT FOR MD41-1744/1754, AND 28 VOLT FOR MD41-1748/1758.

FIGURE 3-3 WIRING DIAGRAM, MD41-1748/1758/1748(5V)/1758(5V) 1744/1754
GARMIN GNS 480 AND GARMIN AT CNX80

SECTION 4 POST INSTALLATION CHECKOUT

4.1 PRE INSTALLATION TESTS

With the MD41-( ) disconnected, turn on the avionics master switch and verify that aircraft power is on pin 13 for. Using an ohm meter, verify pin 25 is aircraft ground.

4.2 OPERATING INSTRUCTIONS

Turn off the avionics master switch and connect the mating connector to the MD41-( ). Turn on the avionics master switch and the MD41-( ) should come on with the following annunciations.

1. NAV or GPS
2. MSG may be flashing depending on the status of the GPS receiver.

Press the lamp test button (if installed), all annunciations should light. Continue pressing the lamp test button and cover the photocell window located in the center of the front panel. All annunciations should dim.

Annunciation brightness at the minimum dimming level may be adjusted by rotation of the dimmer control located on the bottom of the MD41-( ) case. CW rotation lowers the dimming level.

Refer to section 3 of the GNS 480 (CNX80) installation manual for testing of external annunciations.

4.3 CONTINUED AIRWORTHINESS

No periodic maintenance or calibration is necessary for continued airworthiness of the MD41-( ).

ENVIRONMENTAL QUALIFICATION FORM
RTCA / DO160D

NOMENCLATURE: MD41-( ) GPS ANNUNCIATION CONTROL UNIT
MODEL NO: MD41-( ) CLASS A1 TSO NO: C129
MANUFACTURER TEST SPECIFICATION: MPS 7015613
MANUFACTURER: Mid-Continent Instruments and Avionics
9400 E. 34th Street N.
Wichita, KS 67226
Phone (316) 630-0101

Conditions	Section	Description of Conducted Tests
Temperature and Altitude	4.0	Equipment tested to Categories A1 & F2
Low Temperature	4.5.1	
High Temperature	4.5.2 & 4.5.3	
In-Flight Loss of Cooling	4.5.4	Cooling air not required
Altitude	4.6.1	
Decompression	4.6.2	
Overpressure	4.6.3	Not Tested
Temperature Variation	5.0	Equipment tested to Category C
Humidity	6.0	Equipment tested to Category A
Shock	7.0	Equipment tested per Category B
Operational	7.2	
Crash Safety	7.3	
Vibration	8.0	Aircraft type 1 was tested to category U Aircraft type 2 to 6 were tested to category S
Explosion	9.0	Equipment identified as Category X, no test required
Waterproofness	10.0	Equipment identified as Category X , no test required
Fluids Susceptibility	11.0	Equipment identified as Category X, no test required
Sand and Dust	12.0	Equipment identified as Category X, no test required
Fungus	13.0	Equipment identified as Category X, no test required
Salt Spray	14.0	Equipment identified as Category X, no test required
Magnetic Effect	15.0	Equipment tested to Class Z
Power Input	16.0	Equipment tested to Category B
Voltage Spike	17.0	Equipment tested to Category A
Audio Frequency Susceptibility	18.0	Equipment tested to Category B
Induced Signal Susceptibility	19.0	Equipment tested to Category A
Radio Frequency Susceptibility	20.0	Equipment tested to Category T
Radio Frequency Emissions	21.0	Equipment tested to Category B and M
Lightning Induced Transient Susceptibility	22.0	Equipment tested to Category A3C3
Lightning Direct Effects	23.0	Equipment identified as Category X, no tests required
Icing	24.0	Equipment identified as Category X, no test required