Revisions				
ECO	Rev.	Description	Date	Approved

Logo and company name have been changed in title block only. No functional or technical changes have been made. Revision remains unchanged.

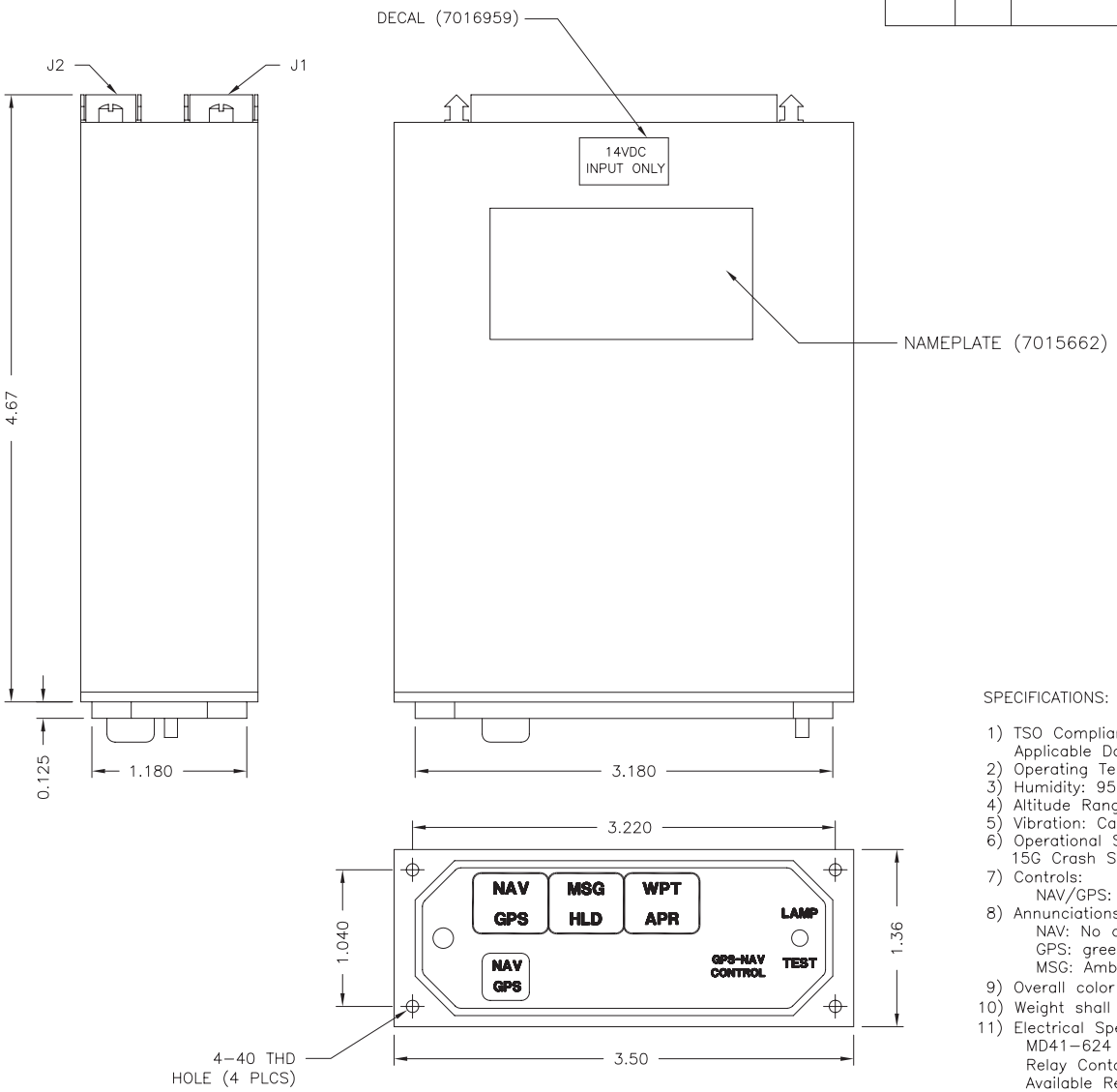

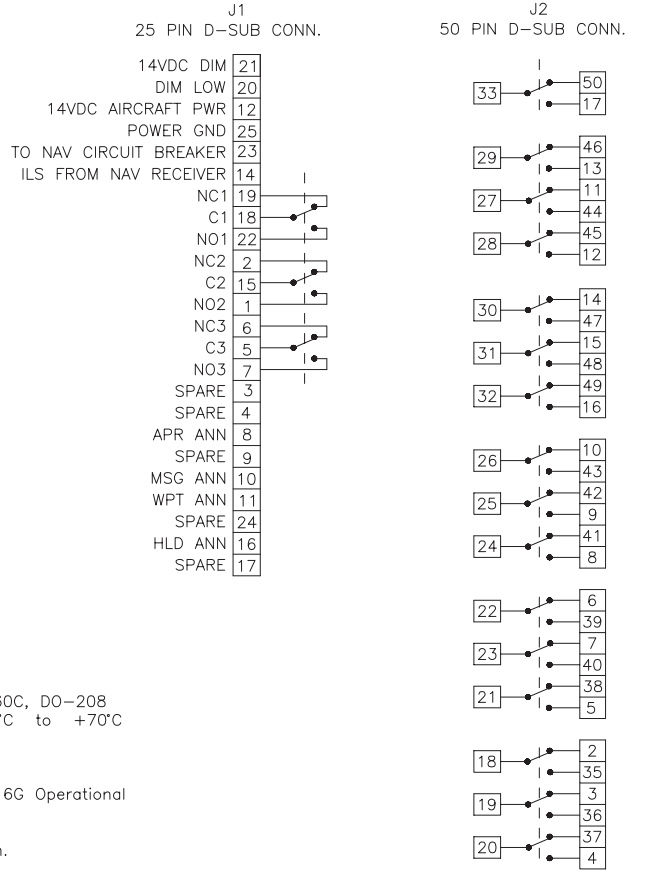

(All relays shown in NAV position, for installation information refer to manual number 7016074).

SPECIFICATIONS:

1) TSO Compliance: TSO C129
   Applicable Documents: RTCA DO-160C, DO-208
2) Operating Temperature Range: -55°C to +70°C
3) Humidity: 95% Non-Condensing.
4) Altitude Range: 0 to 55,000 ft.
5) Vibration: Cat. M and N.
6) Operational Shock: Rigid Mounting, 6G Operational 15G Crash Safety.
7) Controls:
   NAV/GPS: Alternate action switch.
8) Annunciations and colors:
   NAV: No color HLD: Green
   GPS: green WPT: Amber
   MSG: Amber APR: Green
9) Overall color shall be black.
10) Weight shall be 0.75 lbs.
11) Electrical Specifications:
    MD41-624 (14VDC); 0.65Amp
    Relay Contact Current Rating; 2Amp. DC
    Available Relay Poles (SPDT); 19

Notes:
1) Mating connectors:
   For J1: 25 pin female Positronic
   P/N RD25F10JVL0 (MCI P/N: 7014517).
   For J2: 50 pin female Positronic
   P/N RD50F10JVL0 (MCI P/N: 7014509).

This document discloses proprietary information of Mid-Continent Instrument Co., Inc. It may be reproduced or disclosed only with written permission of Mid-Continent Instrument Co., Inc and is not to be used in any way detrimental to the interests of Mid-Continent Instrument Co., Inc.

UNLESS OTHERWISE SPECIFIED
ALL DIMENSIONS ARE IN INCHES
TOLERANCE: FRACTIONAL = ±1/64
.XX = ±.015
.XXX = ±.005
.XXXX = ±.002
ANGULAR = ±0.5°
CONCENTRICITY: .005 TIR
BREAK ALL SHARP EDGES
THREADS PER MIL-S-7742
SURFACE ROUGHNESS

DRAWN	D. Tran	5/13/03
APPROVED	SCN	5/13/03
TOP LEVEL ASSY:	8016399	
USED ON:		
END ITEM:		
CODE IDENT. NO.:	59742	

MidContinent™ INSTRUMENTS+AVIONICS

TITLE: Annunciation Control Unit

PART NUMBER: MD41-624

SCALE: None | DO NOT SCALE THIS DRAWING | SHEET 1 of 1